Die Components
Normalien
Componenti

PEUGEOT CITROËN

OMCR®
STANDARD DIE COMPONENTS

2019.00

E24.51	**E24.51.930.G** Balance block Distanzstück Distanziale 429	**E24.51.930.G** Stop block Abstandsblock Distanziale 429	**E24.52**	**E24.52.105.G** Guide post Führungssäule Colonna 430
E24.52.105.G Anfor Clamping Flange Spannflansch Afnor Ritegno Per Colonna Afnor 431	**E24.52.105.G** Afnor Retaining Flange Sicherungsflansch Afnor Ritegno Afnor 431	**E24.52.105.G** Guide post Führungssäule Colonna 432	**E24.52.105.G** Bush self-lubricating Führungsbuchse Boccola autolubrificante 433	**E24.52.105.G** Toe clamp for bush Haltestück für Buchse Ritegno per boccola 434
E24.52.305.G Toe clamp for bush Haltestück für Buchse Ritegno per boccola 434	**E24.52.504.G** Wear plate VDI 3357 Gleitplatte VDI 3357 Piastra guida VDI 3357 435	**E24.52.504.G** Wear plate VDI 3357 Gleitplatte VDI 3357 Piastra guida VDI 3357 436	**E24.52.504.G** Wear plate Afnor Gleitplatte Afnor Piastra guida Afnor 437	**E24.52.504.G** Wear Plate Afnor Gleitplatte Afnor Piastra guida Afnor 438
E24.52.535.G Wear plate Gleitplatte Piastra guida 439	**E24.52.535.G** Wear plate Gleitplatte Piastra guida 439	**E24.54**	**E24.54.410.G** Elastomer spring Elastomerfeder Molla in elastomero 440	**E24.54.410.G** Elastomer Spring Pin Aufnahmebolzen Perno per molle 440

E24.54.420.G	E24.55	E24.55.265.G	E24.55.265.G	E24.56.200.G
Elastomer cap Elastomerdruckstück Puntalino in elastomero		Shock absorber Halteelemente Ammortizzatore	Retainer pin Steckbolzen Perno di arresto	Gage hardened Einweiser gehärtet Riferimento indurito
441		441	442	442

E24.56.200.G	E24.56	E24.56.630.G	E24.56.630.G	E24.56.630.G
Gage for sensor Einweiser für Teillagekontolle Riferimento per sensore		Key Passfedern Chiavetta	Key Passfedern Chiavetta	Key Passfedern Chiavetta
443		444	445	445

E24.56.700.G	E24.57	E24.57.370.G	E24.57.370.G	E24.57.370.G
Locating cone Kegeldistanz Cono di centraggio		Sleeve Führungseinheit Canotto Guida	Clamp Befestigungselement Morsetto	Guide post Führungssäule Colonna
446		446	447	447

E24.57.370.G	E24.57.370.G	E24.61	E24.61.100.G	E24.61.100.G
Union block Befestigungselement Tassello di unione	Clevis Gabelförmig Forcella		Sensor support Halterung Supporto sensore	Plate Gleitplatte Piastra
448	448		449	449

E24.64	E24.64.100.G	E24.64.100.G	E24.64.100.G	E24.64.100.G
	Stamp retainer Halteplatte Portatimbri	Backing plate Druckplatte Distanziale	Stamp Buchstabenstempel Punzone marchio	Stamp Buchstabenstempel Punzone marchio
	450	450	451	451

E24.64.110.G	E24.65	E24.65.000.G
Stamp retainer Halteplatte Portatimbri		Lifting pin Tragbolzen mit Fallringsicherung Perno di sollevamento
452		453

BALANCE BLOCK - DISTANZSTÜCK - DISTANZIALE

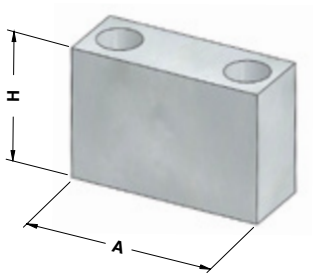

Notes

Material: CK45

STOCK

ORDER EXAMPLE

PSA CODE
A 699 101 804

PSA CODE	A	H
A 699 101 605	80	55
A 699 101 804	110	55
J 856 750 087	100	137
J 859 912 001	80	101

E24.51.930.G

STOP BLOCK - ABSTANDSBLOCK - DISTANZIALE

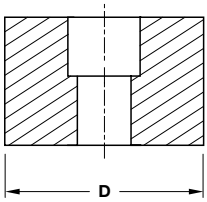

Notes

Material: 25CrMo4

STOCK

ORDER EXAMPLE

PSA CODE
N 001 107 798

PSA CODE	D
N 001 107 798	70
N 001 107 801	40

GUIDE POST - FÜHRUNGSSÄULE - COLONNA

Notes

1. **Material:** 16MnCr5 - **HRC:** 60÷62
2. **Material:** St37

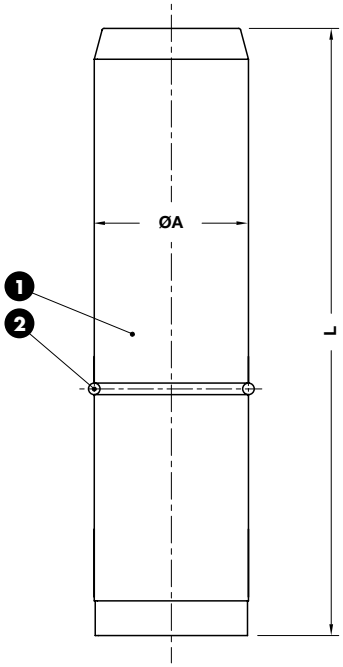

ORDER EXAMPLE	PSA CODE
	Z 000 495 749

PSA CODE	A	L	PSA CODE	A	L
Z 000 115 378	25	100	P 446 118 170	50	220
Z 000 495 749	25	125	P 446 118 174	50	250
Z 000 306 386	32	125	P 446 118 101	50	280
Z 000 325 846	32	220	P 446 118 701	63	250
P 446 117 470	40	180	P 446 118 702	63	315
P 446 117 401	40	200	P 446 119 200	80	315
P 446 117 476	40	220	P 446 119 270	80	355

AFNOR CLAMPING FLANGE - SPANNFLANSCH AFNOR - RITEGNO PER COLONNA AFNOR

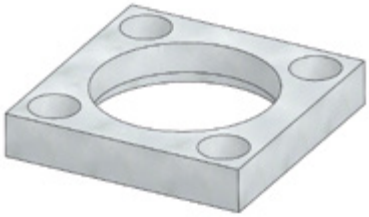

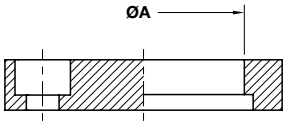

Notes

Material: CK45

STOCK

ORDER EXAMPLE

PSA CODE
P 446 932 711

PSA CODE	A
Z 000 248 844	25
P 446 932 711	32
P 446 932 701	40
P 446 932 702	50
P 446 932 703	63
P 446 932 704	80

E24.52.105.G

OMCR

AFNOR RETAINING FLANGE - SICHERUNGSFLANSCH AFNOR - RITEGNO AFNOR

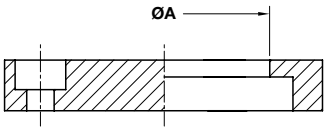

Notes

Material: CK45

STOCK

ORDER EXAMPLE

PSA CODE
P 446 932 720

PSA CODE	A
P 446 932 719	50
P 446 932 720	60
P 446 932 721	80
P 446 932 722	100

GUIDE POST - FÜHRUNGSSÄULE - COLONNA

Notes

Material: 16MnCr5 - **HRC:** 60÷62

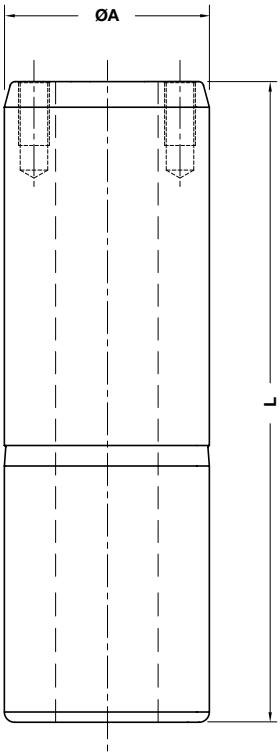

ORDER EXAMPLE

PSA CODE
N 000 829 460

PSA CODE	A	L	PSA CODE	A	L
N 000 622 562	100	280	Z 000 499 647	100	355
N 000 829 460	100	250	Z 000 508 422	100	400
Z 000 508 424	100	315			

BUSH SELF-LUBRICATING - FÜHRUNGSBUCHSE - BOCCOLA AUTOLUBRIFICANTE

Notes
Material: Bronze + Graphite **HB** > 190

STOCK

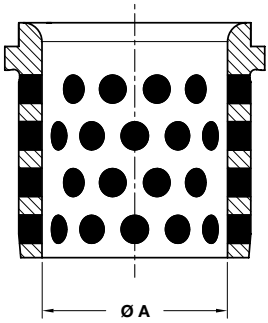

ORDER EXAMPLE	PSA CODE
	Z 000 499 644

PSA CODE	A
Z 000 499 644	100

E24.52.105.G

OMCR

TOE CLAMP FOR BUSH - HALTESTÜCK FÜR BUCHSE - RITEGNO PER BOCCOLA

Notes

Material: CK45

STOCK

Application example

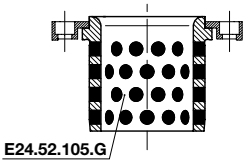

ORDER EXAMPLE	PSA CODE
	Z 000 263 005

PSA CODE
Z 000 263 005

E24.52.305.G

OMCR

TOE CLAMP FOR BUSH - HALTESTÜCK FÜR BUCHSE - RITEGNO PER BOCCOLA

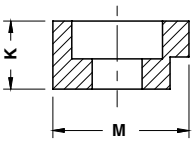

Notes

Material: CK45

STOCK

ORDER EXAMPLE	PSA CODE
	P 446 932 708

PSA CODE	K	M
P 446 932 706	9	18
P 446 932 708	11	22
P 446 932 709	18	26

WEAR PLATE SELF-LUBRICATING VDI 3357
GLEITPLATTE BRONZE MIT FESTSCHMIERSTOFF VDI 3357
PIASTRA GUIDA AUTOLUBRIFICANTE VDI 3357

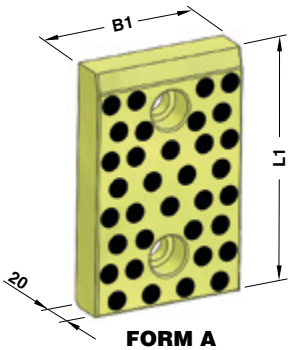

FORM A

Notes

Material: Bronze + Graphite
HB > 190

STOCK

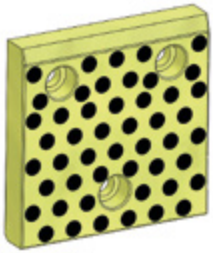

FORM B

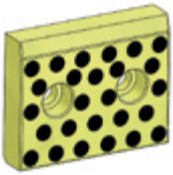

FORM C

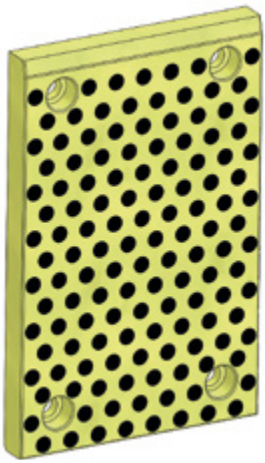

FORM D

ORDER EXAMPLE

PSA CODE
N 001 275 075

* Not in accordance with VDI3357
Nicht mit Entspricht VDI3357
Non conforme alla norma VDI3357

PSA CODE	B1	L1	FORM
N 001 337 331	50	80	A
N 001 275 075	50	100	A
N 001 275 076	50	125	A
N 001 275 095	50	160	A
N 001 275 096	50	200	A
N 001 334 791	80	50	C
N 001 337 333	80	80	A
N 001 275 115	80	100	A
N 001 275 135	80	125	A
N 001 275 136	80	160	A
N 001 275 137	80	200	A
N 001 275 138	100	50	C
N 001 275 139	100	80	C
N 001 275 155	100	100	A
N 001 275 156	100	125	A

PSA CODE	B1	L1	FORM
N 001 275 175	100	160	A
N 001 275 176	100	200	A
N 001 275 436*	100	250	D
N 001 275 195	125	80	C
N 001 275 215	125	100	B
N 001 275 235	125	125	B
N 001 275 236	125	160	B
N 001 275 255	125	200	B
N 001 275 256	160	100	B
N 001 275 257	160	125	B
N 001 275 295	160	160	B
N 001 275 437*	160	200	D
N 001 275 438*	160	250	D
N 001 275 439*	160	300	D

WEAR PLATE STEEL VDI 3357
GLEITPLATTE STAHL VDI 3357
PIASTRA GUIDA IN ACCIAIO VDI 3357

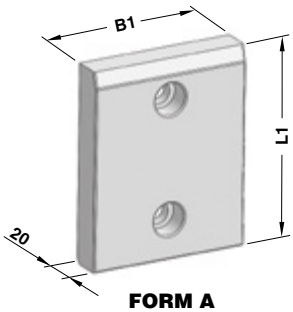

FORM A

Notes

Material: 16MnCr5
HRC: 58÷60

STOCK

FORM B

FORM C

FORM D

ORDER EXAMPLE

PSA CODE
N 001 275 495

* Not in accordance with VDI3357
entspricht nicht VDI3357
Non conforme alla linea guida VDI3357

PSA CODE	B1	L1	FORM
N 001 337 327	50	80	A
N 001 275 495	50	100	A
N 001 275 496	50	125	A
N 001 275 497	50	160	A
N 001 275 515	50	200	A
N 001 334 794	80	50	C
N 001 337 329	80	80	A
N 001 275 535	80	100	A
N 001 275 536	80	125	A
N 001 275 537	80	160	A
N 001 275 555	80	200	A
N 001 275 575	100	50	C
N 001 275 595	100	80	C
N 001 275 615	100	100	A
N 001 275 616	100	125	A

PSA CODE	B1	L1	FORM
N 001 275 617	100	160	A
N 001 275 618	100	200	A
N 001 276 057*	100	250	D
N 001 275 635	125	80	C
N 001 275 655	125	100	B
N 001 275 656	125	125	B
N 001 275 675	125	160	B
N 001 275 676	125	200	B
N 001 275 677	160	100	B
N 001 275 695	160	125	B
N 001 275 696	160	160	B
N 001 276 058*	160	200	D
N 001 276 059*	160	250	D
N 001 275 762*	160	300	D

WEAR PLATE SELF-LUBRICATING AFNOR
GLEITPLATTE BRONZE MIT FESTSCHMIERSTOFF AFNOR
PIASTRA GUIDA AUTOLUBRIFICANTE AFNOR

FORM A

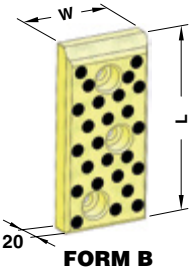

FORM B

Notes

Material: Bronze + Graphite
HB > 190
Only for replacement
Nur für Reparatur
Solo per riparazione

STOCK

FORM C

FORM E

FORM F

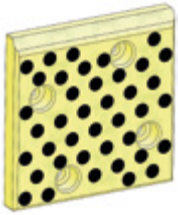

FORM D

FORM G

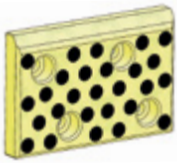

FORM H

ORDER EXAMPLE

PSA CODE
Z 000 166 216

PSA CODE	W	L	FORM	PSA CODE	W	L	FORM
Z 000 166 214	70	100	A	Z 000 166 227	100	300	F
Z 000 166 216	70	150	B	Z 000 166 218	150	100	H
Z 000 166 221	70	200	C	Z 000 166 219	150	150	D
Z 000 166 215	100	100	G	Z 000 166 223	150	200	C
Z 000 166 217	100	150	D	Z 000 166 226	150	250	E
Z 000 166 222	100	200	C	Z 000 166 228	150	300	F
Z 000 166 225	100	250	E	Z 000 166 224	200	100	H

WEAR PLATE STEEL AFNOR
GLEITPLATTE STAHL AFNOR
PIASTRA GUIDA IN ACCIAIO AFNOR

FORM A

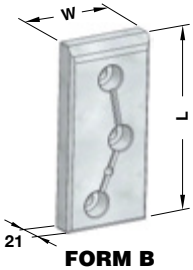

FORM B

Notes

Material: 16MnCr5
HRC: 58÷60
Only for replacement
Nur für Reparatur
Solo per riparazione

STOCK

FORM C

FORM E

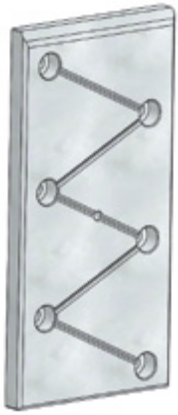

FORM F

FORM D

FORM G

FORM H

ORDER EXAMPLE

PSA CODE
P 446 626 558

PSA CODE	W	L	FORM
Z 000 166 213	70	100	A
P 446 626 558	70	150	B
P 446 627 059	70	200	C
P 446 625 855	100	100	G
P 446 626 559	100	150	D
P 446 627 060	100	200	C
P 446 627 454	100	250	E

PSA CODE	W	L	FORM
P 446 627 754	100	300	F
P 446 626 560	150	100	H
P 446 626 561	150	150	D
P 446 627 061	150	200	C
P 446 627 455	150	250	E
P 446 627 755	150	300	F
Z 000 166 220	200	100	H

E24.52.535.G

OMCR

WEAR PLATE SELF-LUBRICATING
GLEITPLATTE BRONZE MIT FESTSCHMIERSTOFF
PIASTRA GUIDA AUTOLUBRIFICANTE

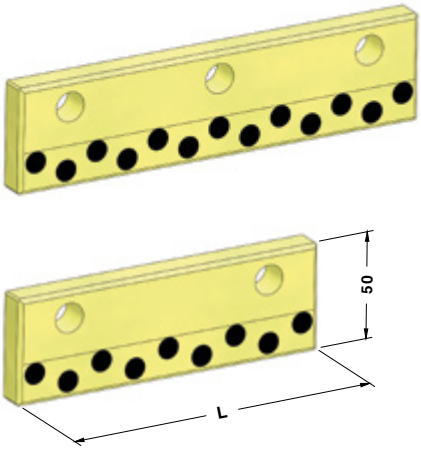

Notes

Material: Bronze + Graphite
HB > 190

STOCK

ORDER EXAMPLE

PSA CODE
N 000 577 043

PSA CODE	L
N 000 577 042	200
N 000 577 043	150

E24.52.535.G

OMCR

WEAR PLATE SELF-LUBRICATING
GLEITPLATTE BRONZE MIT FESTSCHMIERSTOFF
PIASTRA GUIDA AUTOLUBRIFICANTE

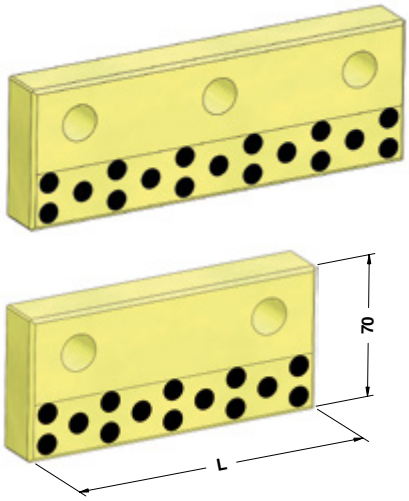

Notes

Material: Bronze + Graphite
HB > 190

STOCK

ORDER EXAMPLE

PSA CODE
N 000 577 047

PSA CODE	L
N 000 577 046	200
N 000 577 047	150

ELASTOMER SPRING - ELASTOMERFEDER - MOLLA IN ELASTOMERO

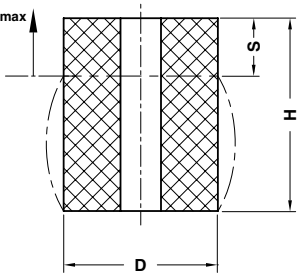

⚠

S = max. 30% H

Notes

Material: Polyurethane 90 SH

STOCK

ORDER EXAMPLE	PSA CODE
	X 346 552 171

PSA CODE	D	H	Fmax (daN)
X 346 552 172	16	20	130
X 346 552 171	16	25	130
X 346 552 670	20	25	200
X 346 552 671	20	32	200
Z 000 163 267	25	20	300
X 346 553 173	25	32	300
Z 000 263 272	25	40	300
Z 000 163 268	32	40	580

PSA CODE	D	H	Fmax (daN)
Z 000 163 783	40	32	1250
X 346 553 871	40	63	1250
X 346 554 700	50	40	1700
X 346 554 772	50	50	1700
X 346 554 770	50	80	1700
X 346 554 703	50	100	1700
Z 000 163 269	63	40	2600
Z 000 163 270	63	80	2600

PSA CODE	D	H	Fmax (daN)
X 346 555 572	80	80	4300
Z 000 163 271	80	100	4300
X 346 555 570	80	125	4300
X 346 555 372	100	80	5900
X 346 555 373	100	100	5900
X 346 555 578	100	125	5900
Z 000 163 272	125	100	9900
X 346 556 305	125	160	9900

E24.54.410.G

ELASTOMER SPRING PIN - AUFNAHMEBOLZEN - PERNO PER MOLLE IN ELASTOMERO

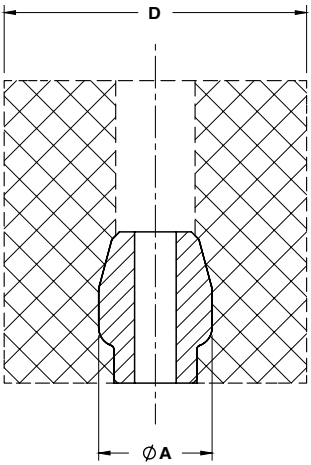

Notes

Material: CK45

STOCK

ORDER EXAMPLE	PSA CODE
	G 856 699 005

PSA CODE	A	D
G 856 699 010	25	50÷63
G 856 699 005	30	80÷100
G 856 699 002	38	125

E24.54.420.G

OMCR

ELASTOMER CAP - ELASTOMERDRUCKSTÜCK - PUNTALINO IN ELASTOMERO

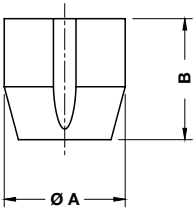

Notes

Material: Elastomer 92 SH

STOCK

ORDER EXAMPLE

PSA CODE
P 399 341 501

PSA CODE	A	B
P 399 341 500	6	9,5
P 399 341 501	10	15,5
P 399 341 502	16	25
P 399 341 700	24	25

E24.55.265.G

OMCR

SHOCK ABSORBER - HALTEELEMENTE - AMMORTIZZATORE

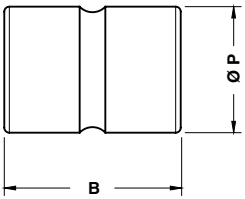

⚠

Without silicone
Ohne silicon
Senza silicone

Notes

Material: Elastomer 92 SH

STOCK

ORDER EXAMPLE

PSA CODE
Z 000 404 676

PSA CODE	B	P
Z 000 404 675	45	25
Z 000 404 676	50	32
X 346 563 970	60	40
Z 000 404 677	70	50
X 346 564 970	80	63
Z 000 404 678	90	80

E24.55.265.G

OMCR

RETAINER PIN - STECKBOLZEN - PERNO DI ARRESTO

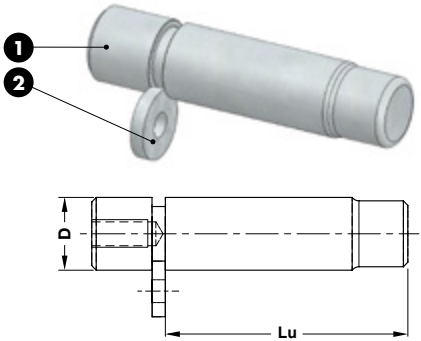

Notes

1 2 **Material:** CK45

STOCK ...

ORDER EXAMPLE

PSA CODE
Z 000 400 338

PSA CODE	D	Lu	PSA CODE	D	Lu	PSA CODE	D	Lu
Z 000 400 337	20	81	Z 000 400 342	32	148	Z 000 400 350	50	220
Z 000 400 338	25	81	Z 000 400 345	40	132	Z 000 400 353	63	210
Z 000 400 339	25	98	Z 000 400 346	40	192	Z 000 400 354	63	250
Z 000 400 487	32	103	Z 000 400 349	50	165	Z 000 424 846	80	210

E24.56.200.G

OMCR

GAGE HARDENED - EINWEISER GEHÄRTET - RIFERIMENTO INDURITO

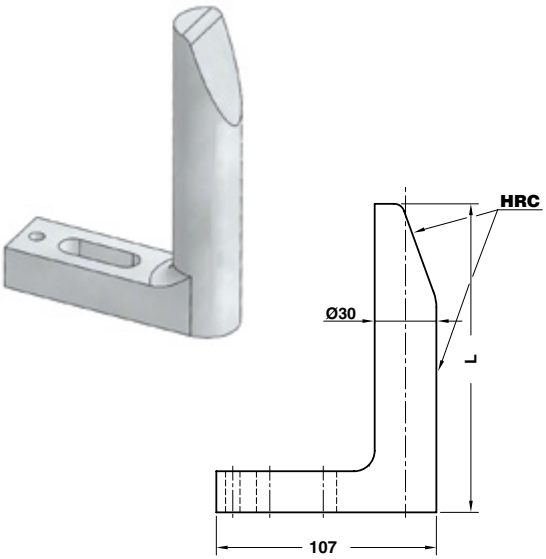

Notes

Material: CK60 - **HRC:** 58÷60

STOCK

ORDER EXAMPLE

PSA CODE
N 000 445 401

PSA CODE	L
N 000 445 400	65
N 000 445 401	90
N 000 445 402	120
N 000 445 403	150
N 000 445 404	180
N 000 445 405	250

GAGE FOR SENSOR - EINWEISER FÜR TEILLAGEKONTOLLE - RIFERIMENTO PER SENSORE

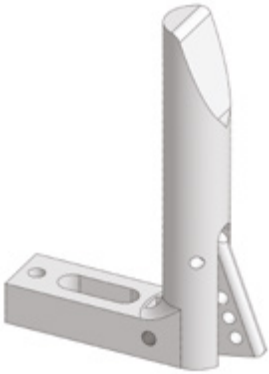

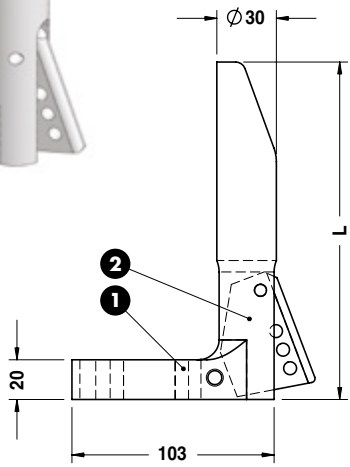

Notes

1. **Material:** CK60
2. **Material:** St37 - **HRC:** 58÷60

STOCK ...

ORDER EXAMPLE

PSA CODE
N 001 281 615

PSA CODE	L
N 001 281 595	120
N 001 281 615	150
N 001 281 635	180
N 001 281 655	250

KEY - PASSFEDERN - CHIAVETTA

Notes

Material: CK45

Only for replacement
Nur für Reparatur
Solo per riparazione

STOCK

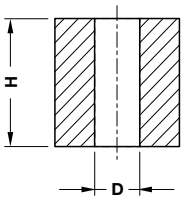

FORM A

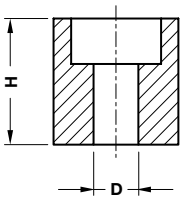

FORM B

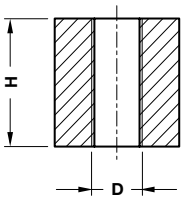

FORM C

ORDER EXAMPLE

PSA CODE
J 859 623 008

PSA CODE	H	Nr. hole	D	FORM
X 548 292 170	20	1	9	A
J 859 623 008	25	1	9	A
X 548 299 870	32	2	11	A
J 859 623 003	25	1	9	B
J 859 623 004	25	2	9	B
J 859 623 013	32	1	9	B
J 859 623 014	32	2	9	B
J 859 623 001	25	1	M8	C

PSA CODE	H	Nr. hole	D	FORM
J 859 623 002	25	2	M8	C
J 859 623 006	25	1	M10	C
J 859 623 007	25	2	M10	C
J 859 623 011	32	1	M8	C
J 859 623 012	32	2	M8	C
J 859 623 016	32	1	M10	C
J 859 623 017	32	2	M10	C

KEY - PASSFEDERN - CHIAVETTA

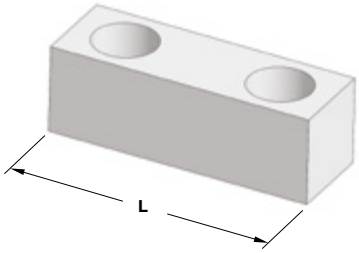

Notes

Material: CK45

STOCK

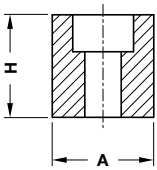

ORDER EXAMPLE

PSA CODE
J 859 623 008

PSA CODE	A	H	L
J 859 623 004	25	25	75
J 859 623 014	32	32	75

E24.56.630.G

OMCR

KEY - PASSFEDERN - CHIAVETTA

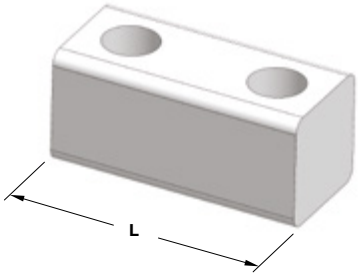

Notes

Material: 16MnCr5 - **HRC:** 60÷62

STOCK

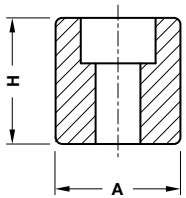

ORDER EXAMPLE

PSA CODE
N 001 327 512

PSA CODE	A	H	L
N 001 327 511	45 h6	45	100
N 001 327 512	45 h6	45	200

E24.56.700.G

OMCR

LOCATING CONE - KEGELDISTANZ - CONO DI CENTRAGGIO

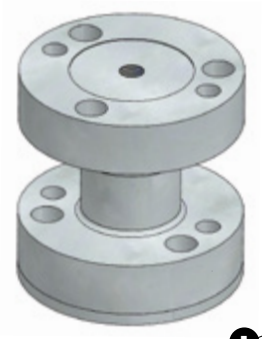

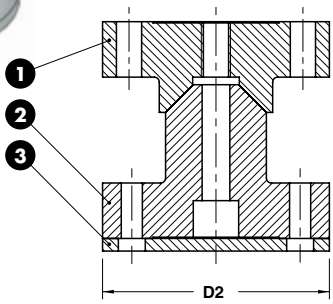

Notes

1 2
Material: X155CrMo12 - **HRC:** 58÷60
3 **Material:** 36CrNiMo4

STOCK ...

ORDER EXAMPLE	PSA CODE
	Z 000 400 140

PSA CODE	D2
Z 000 400 139	90
Z 000 400 140	110

E24.57.370.G

OMCR

SLEEVE - FÜHRUNGSEINHEIT - CANOTTO GUIDA

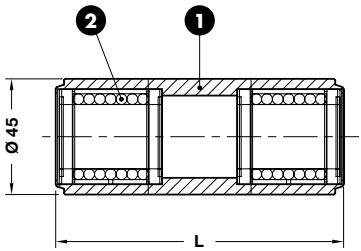

Notes

1 **Material:** CK45
2 STAR 0658-225-40

STOCK ... ⟺

ORDER EXAMPLE	PSA CODE
	P 446 905 006

PSA CODE	L
P 446 905 005	112
P 446 905 006	200

E24.57.370.G

OMCR

CLAMP - BEFESTIGUNGSELEMENT - MORSETTO

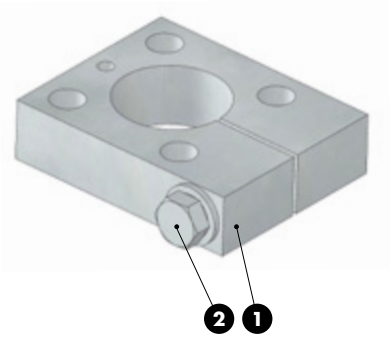

Notes
1 **Material:** CK45
2 M12x70 DIN 931

STOCK ...

ORDER EXAMPLE	PSA CODE
	P 446 932 718

PSA CODE
P 446 932 718

E24.57.370.G

OMCR

GUIDE POST - FÜHRUNGSSÄULE - COLONNA

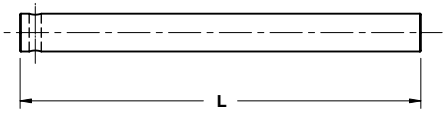

Notes
Material: 16MnCr5 - **HRC:** 60÷62

STOCK ⟺

ORDER EXAMPLE	PSA CODE
	P446 940 701

PSA CODE	L
P 446 940 700	265
P 446 940 701	350
P 446 940 702	400
P 446 940 703	450
P 446 940 704	500

E24.57.370.G

OMCR

UNION BLOCK - BEFESTIGUNGSELEMENT - TASSELLO DI UNIONE

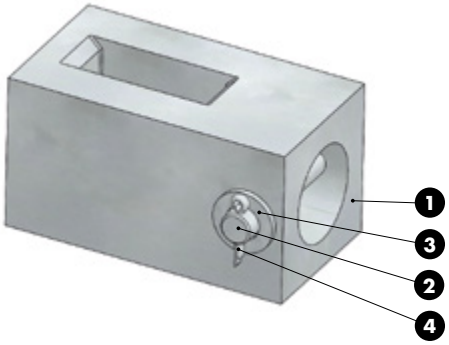

Notes

1. **Material:** 36NiCrMo4 - **HV** > 700
2. **Material:** CK45
3. DIN 126
4. DIN 94

STOCK ...

ORDER EXAMPLE	PSA CODE
	P 446 942 700

PSA CODE
P 446 942 700

E24.57.370.G

OMCR

CLEVIS - GABELFÖRMIG - FORCELLA

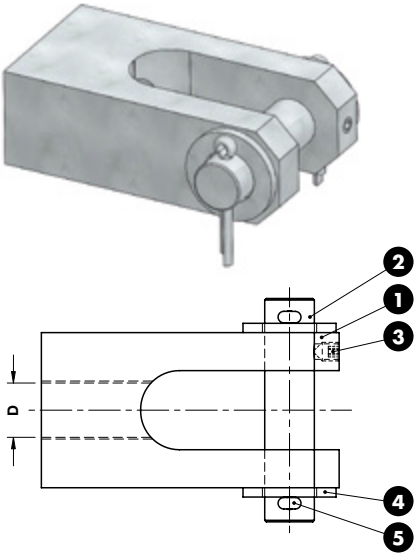

Notes

1 2 **Material:** CK45
3. DIN 914
4. DIN 126
5. DIN 94

STOCK ...

ORDER EXAMPLE	PSA CODE
	X 652 131 326

PSA CODE	D
Z 000 228 984	M16 x 1,5
X 652 131 326	M20 x 1,5

SENSOR SUPPORT - HALTERUNG - SUPPORTO SENSORE

Notes
Material: CK45

STOCK

G 858 900 077-18

G 858 900 077-30

ORDER EXAMPLE	PSA CODE
	G 858 900 077-30

PSA CODE
G 858 900 077-18
G 858 900 077-30

PLATE - GLEITPLATTE - PIASTRA

G 858 900 134-1

G 858 900 134-2

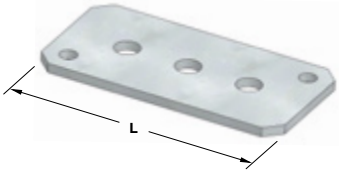

G 858 900 134-3

Notes
Material: CK45

STOCK

ORDER EXAMPLE	PSA CODE
	G 858 900 134-2

PSA CODE	L
G 858 900 134-1	80
G 858 900 134-2	120
G 858 900 134-3	160

STAMP RETAINER - HALTEPLATTE - PORTATIMBRI

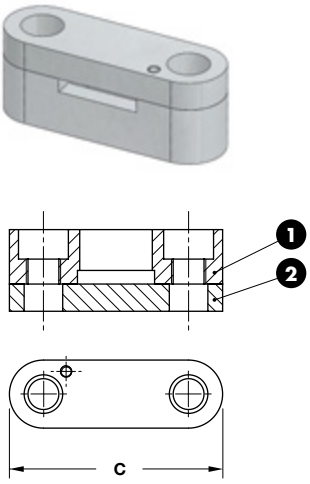

Notes

1 2 **Material:** CK45

STOCK ...

ORDER EXAMPLE — PSA CODE: P 399 391 701

PSA CODE	C	N° of punch
P 399 391 701	47	4
N 000 467 867	55	6
P 399 391 702	63	8
P 399 391 703	71	10

E24.64.100.G OMCR

BACKING PLATE - DRUCK PLATTE - DISTANZIALE

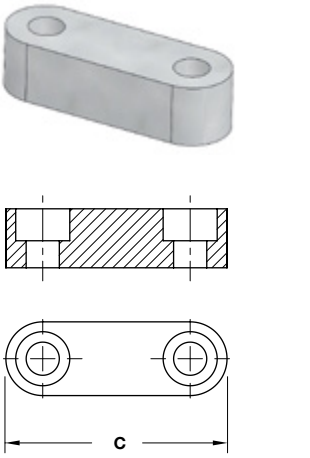

Notes

Material: CK45

STOCK

ORDER EXAMPLE — PSA CODE: N 000 467 866

PSA CODE	C	N° of punch
Z 000 151 091	47	4
N 000 467 866	56	6
Z 000 151 092	63	8
Z 000 151 093	71	10

E24.64.100.G

OMCR

STAMP - BUCHSTABENSTEMPEL - PUNZONE MARCHIO

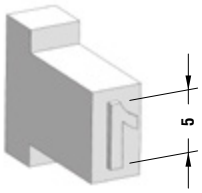

Notes

Material: X153CrMoV12
HRC: 54÷56

STOCK

ORDER EXAMPLE

PSA CODE
P 785 150 102

PSA CODE	Stamp	PSA CODE	Stamp	PSA CODE	Stamp	PSA CODE	Stamp
P 785 150 002	0 or O	Z 000 504 318	Dash "-"	P 785 172 104	I	P 785 153 202	T
P 785 150 102	1	N 000 464 606	Dash "_"	P 785 152 202	J	P 785 153 302	U
P 785 150 202	2	P 785 151 302	A	P 785 152 302	K	P 785 153 402	V
P 785 150 302	3	P 785 151 402	B	P 785 152 402	L	P 785 153 502	W
P 785 150 402	4	P 785 151 502	C	P 785 152 503	M	P 785 153 602	X
P 785 150 502	5	P 785 151 602	D	P 785 152 602	N	P 785 153 702	Y
P 785 150 602	6 or 9	P 785 151 702	E	P 785 152 802	P	P 785 153 802	Z
P 785 150 702	7	P 785 151 802	F	P 785 152 902	Q		
P 785 150 802	8	P 785 151 902	G	P 785 153 002	R		
P 785 289 002	Space	P 785 152 002	H	P 785 153 102	S		

E24.64.100.G

OMCR

STAMP - BUCHSTABENSTEMPEL - PUNZONE MARCHIO

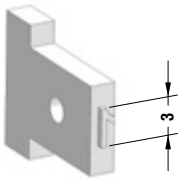

Notes

Material: X153CrMoV12
HRC: 54÷56

STOCK

ORDER EXAMPLE

PSA CODE
Z 000 491 957

PSA CODE	Stamp	PSA CODE	Stamp	PSA CODE	Stamp	PSA CODE	Stamp
Z 000 491 893	0 or O	Z 000 504 319	Dash "-"	Z 000 491 973	I	Z 000 492 024	T
Z 000 491 957	1	N 000 467 865	Dash "_"	Z 000 491 974	J	Z 000 492 025	U
Z 000 491 958	2	Z 000 491 965	A	Z 000 491 975	K	Z 000 492 026	V
Z 000 491 959	3	Z 000 491 966	B	Z 000 491 976	L	Z 000 492 027	W
Z 000 491 960	4	Z 000 491 967	C	Z 000 491 977	M	Z 000 492 028	X
Z 000 491 961	5	Z 000 491 968	D	Z 000 491 978	N	Z 000 492 029	Y
Z 000 491 962	6 or 9	Z 000 491 969	E	Z 000 491 979	P	Z 000 492 030	Z
Z 000 491 963	7	Z 000 491 970	F	Z 000 491 980	Q		
Z 000 491 964	8	Z 000 491 971	G	Z 000 492 022	R		
Z 000 492 408	Space	Z 000 491 972	H	Z 000 492 023	S		

STAMP RETAINER - HALTEPLATTE - PORTATIMBRI

N 001 648 906

N 001 162 511

Notes

1. **Material:** X100CDV5-T5
   HRC: 56÷58
2. **Material:** XC70

10 ...

ORDER EXAMPLE	PSA CODE
	N 001 162 511

PSA CODE	Punchs
N 001 648 906	Groupe PSA
N 001 162 511	DS

LIFTING PIN - TRAGBOLZEN MIT FALLRINGSICHERUNG - PERNO DI SOLLEVAMENTO

Respect the max load
Maximale Nutzlast beachten
Rispettare il carico Max

WARNING - ACHTUNG - ATTENZIONE:

For safety reason, please consider always that the weight of the die has to be supported by just 2 lifting pins.

Aus Sicherheitsgründen stets berücksichtigen, dass zwei Tragbolzen das gesamte Werkzeuggewicht tragen müssen.

Per ragioni di sicurezza, considerare sempre che il peso dello stampo deve essere sopportato da 2 soli perni.

Notes

Material: St52

CE STOCK

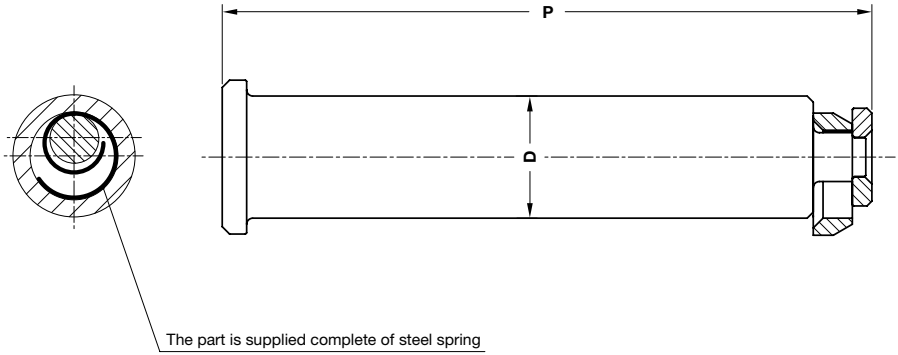

ORDER EXAMPLE

PSA CODE
P 953 255 870

PSA CODE	Max load (kg)	Max die weight (kg)	P	D
P 953 254 770	6000	12000	154	32
P 953 255 870	9000	18000	197,75	40
P 953 256 670	14000	28000	247,50	50
P 953 257 470	22500	45000	309	63